Trusted. Tested. Tough.®

ZOELLER® ENGINEERED PRODUCTS

MAIL TO: P.O. BOX 16347 • Louisville, KY 40256-0347
SHIP TO: 3649 Cane Run Road • Louisville, KY 40211-1961
Tel: (502) 778-2731 • 1 (800) 928-PUMP

SECTION: Z5.20.200
ZM3385
0124
Supersedes
0323

Visit our website:
zoellerengineered.com

Product information presented here reflects conditions at time of publication. Consult factory regarding discrepancies or inconsistencies.

X6290 HAZARDOUS LOCATION SERIES

Class I, Division 1, Groups C & D Rated and Class I, Zone 1, Groups IIA & IIB Gas Areas

or

Class II, Division 1, Groups E, F & G and Zone 20 Dust Areas

FAMILY OWNED AMERICAN PROUD

C US
Certified to CSA Standard
C22.2 No. 145
Tested to FM Standard
3600 & 3615 & 3616

TECHNICAL DATA

Commercial Duty Sewage

MODEL NUMBER:	☐ X6292	☐ X6294	☐ X6295
PUMP NAME PLATE HORSEPOWER: HP	1/2	1-1/2	2
MOTOR RPM:	3450	3450	3450
IMPELLER:	CAST IRON VORTEX		
DISCHARGE SIZE:	☐ 2" NPT VERTICAL DISCHARGE	☐ 3" NPT VERTICAL DISCHARGE	

PUMP NET WEIGHT: lbs. (kg)	129 lbs. (58.5kg)	SERVICE FACTOR:		1.0
SOLID SIZE: in (mm)	2" (50 mm)	TANDEM SEALS:		STANDARD
MOTOR DESIGN LETTER:	NEMA B	SQUARE RING SEALS:		VITON
CORD LENGTH: ft (m)	25' (7.6 m) ☐ _____'	MOTOR SHAFT:		416 SS
SENSOR CORD LENGTH:	INCLUDED W/POWER CORD	STATOR AND LEAD WIRES INSULATION:	X6292	CLASS B
MOTOR TYPE CSA APPROVED:	Class I, Division 1, Groups C & D Class I, Zone 1, Groups IIA & IIB		X6294-X6295	CLASS F
	SUBMERSIBLE	MAXIMUM STATOR TEMPERATURE:	CLASS B	266 °F (130 °C)
SURFACE TEMPERATURE CODE:	T5 (1PH) T6 (3PH)			

SHAFT SEAL CONSTRUCTION:	STANDARD	UPPER - CARBON/CERAMIC, LOWER - SILICON CARBIDE/CARBON
	OPTIONAL UPPER	☐CARBON/SILICON CARBIDE ☐SILICON CARBIDE/SILICON CARBIDE
	OPTIONAL LOWER	☐SILICON CARBIDE/SILICON CARBIDE
STANDARD SENSING DEVICES*	MOTOR THERMAL SHUTOFF	INTEGRAL OVERLOAD WITH AUTOMATIC RESET - 1 PHASE
		THERMAL SENSOR WITH LEAD WIRES - 3 PHASE
	MOISTURE DETECTION	MOISTURE SENSING PROBES WITH LEAD WIRES
MINIMUM FLUID LEVEL FOR CONTINUOUS OPERATIONS: in (m)		24" (0.6 m)
MAXIMUM WATER TEMPERATURE:		104 °F (40 °C)

*Requires a circuit in control panel to function.

MODEL	HP	☐115V/1PHASE	☐200V/1PHASE	☐230V/1PHASE	☐200V/3PHASE	☐230V/3PHASE	☐460V/3PHASE	☐575V/3PHASE
		FLA	FLA	FLA	FLA	FLA	FLA	FLA
X6292	1/2	15.0	--	--	--	--	--	--
X6294	1-1/2	N/A	17.8	13.7	10.8	9.5	4.8	3.8
X6295	2	N/A	20.5	17.1	14.3	12.2	6.1	4.9

© Copyright 2024 Zoeller® Co. All rights reserved.

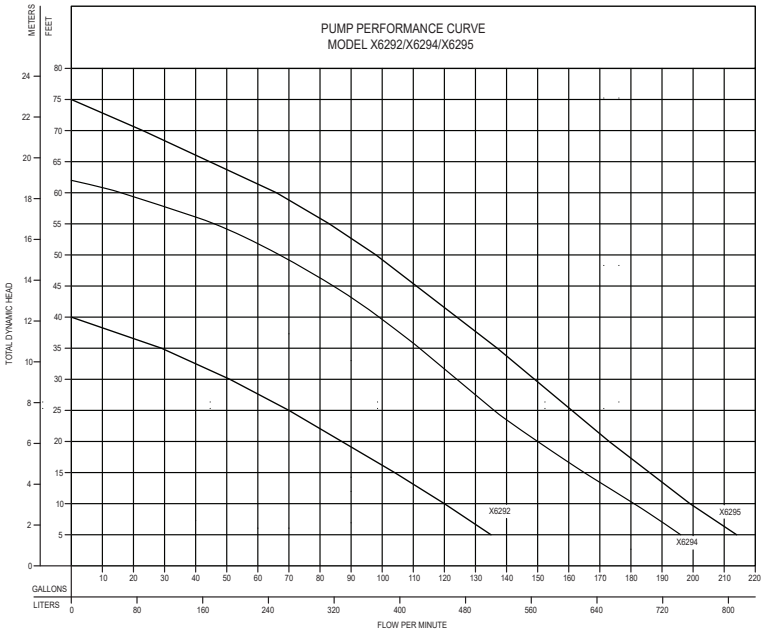

MODEL		X6292		X6294		X6295	
Feet	Meters	Gal.	Liters	Gal.	Liters	Gal.	Liters
5	1.5	135	511	196	742	214	810
10	3.0	120	454	181	685	199	753
15	4.6	104	394	165	625	186	704
20	6.1	87	329	150	568	173	655
25	7.6	70	265	136	515	161	609
30	9.1	51	193	124	469	149	564
35	10.7	29	110	112	424	137	519
40	12.2	--	--	99	375	124	469
50	15.2	--	--	67	254	98	371
55	16.8	--	--	46	174	83	314
60	18.3	--	--	16	61	66	250
70	21.3	--	--	--	--	23	87
Shut-off Head:		40 ft.(12.2m)		62 ft.(18.9m)		75 ft.(22.9m)	

009919

Standard all models - 25 ft. (7.6 m) cord - 1/2 HP				
X6292 MODELS	Control Selection			Listings
	Volts	PH	Amps	c CSA us
NX6292	115	1	15.0	No(1)
EX6292	230	1	7.5	Yes
IX6292	200	1	8.8	Yes
JX6292	200	3	6.4	Yes
FX6292	230	3	5.2	Yes
GX6292	460	3	2.9	Yes
BAX6292	575	3	2.4	No

Standard all models - 25 ft. (7.6 m) cord - 1-1/2 HP				
X6294 MODELS	Control Selection			Listings
	Volts	PH	Amps	c CSA us
*EX6294	230	1	13.7	Yes
IX6294	200	1	17.8	Yes
JX6294	200	3	10.8	Yes
FX6294	230	3	9.5	Yes
GX6294	460	3	4.8	Yes
BAX6294	575	3	3.8	Yes

Standard all models - 25 ft. (7.6 m) cord - 2 HP				
X6295 MODELS	Control Selection			Listings
	Volts	PH	Amps	c CSA us
*EX6295	230	1	17.1	No (1)
IX6295	200	1	20.5	Yes
JX6295	200	3	14.3	Yes
FX6295	230	3	12.2	Yes
GX6295	460	3	6.1	Yes
BAX6295	575	3	4.9	Yes

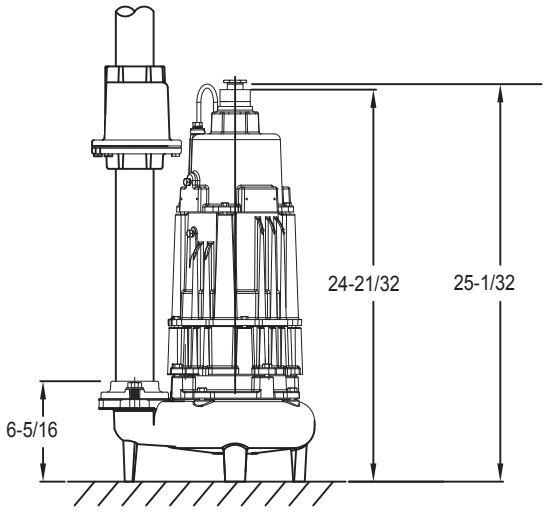

SK1990

FEATURES

- Durable epoxy coated cast iron construction.
- Motor - 1/2 hp or 2 hp, 60 hz, 1750 rpm, 1 ph or 3 ph, oil filled, hermetically sealed
- Thermal sensor with lead wire (3PH), integral overload with automatic reset (1 PH)
- Bearings - upper and lower ball bearings
- Stainless steel motor shaft.
- Dual mechanical shaft seals - upper carbon/ceramic, lower silicon carbide/carbon. Optional seal materials available
- Viton o-ring seals and cover gasket
- Impeller - non-clogging cast iron vortex design passes 2" spherical solids.
- 25 Foot UL listed 3 wire neoprene cord and plug. Longer cords available in lengths of 35-50 feet.
- No screens to clog.
- Stainless steel screws, bolts and handle.
- 2" NPT discharge with 3" lange available.
- Corrosion resistant powder coated epoxy inish.
- Moisture sensors available for early warning of seal failure.
- 100% Computerized tested.

CAUTION

All installation of controls, protection devices and wiring should be done by a qualified licensed electrician. All electrical and safety codes should be followed including the most recent National Electric Code (NEC) and the Occupational Safety and Health Act (OSHA).

© Copyright 2024 Zoeller® Co. All rights reserved.