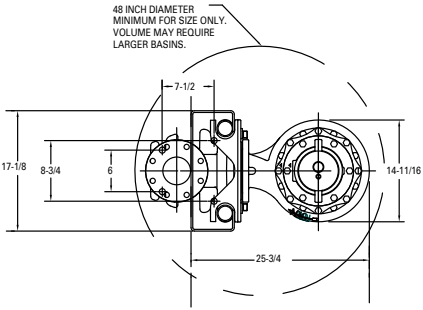

SIMPLEX INSTALLATION

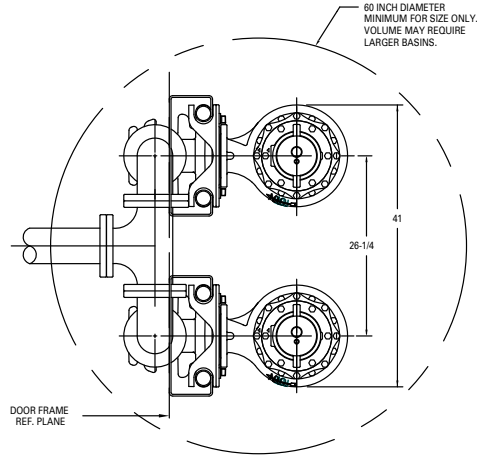

DUPLEX INSTALLATION
DIMENSIONS BASED ON STD. ANSI FITTING SIZES
CHECK VALVES REQUIRED, NOT SHOWN FOR CLARITY
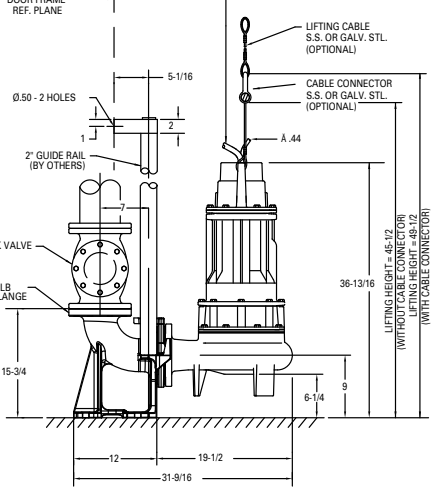
4 GAGE	Ø1.350
8 GAGE	Ø.930
12 GAGE	Ø.640