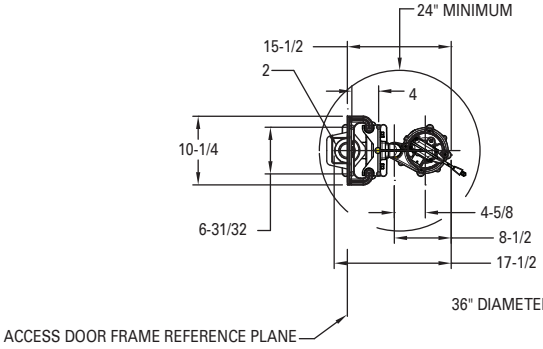

SIMPLEX INSTALLATION

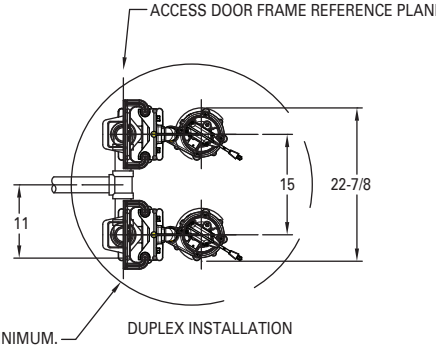

DUPLEX INSTALLATION

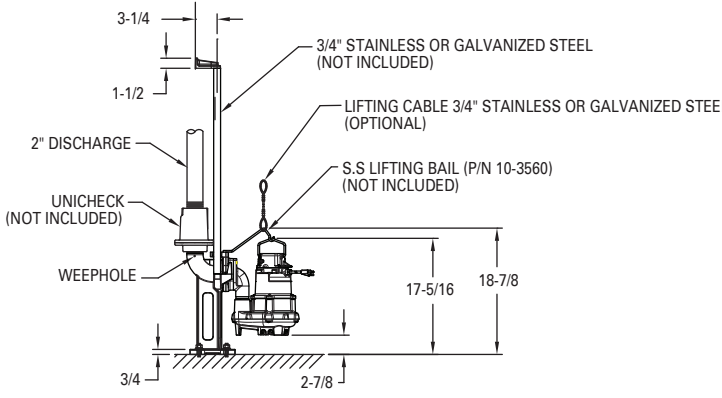

DIMENSIONS ARE BASED ON STANDARD ANSI FITTING SIZES. CHECK ARE VALVES REQUIRED,
NOT SHOWN FOR CLARITY. ALL DIMENSIONSIN INCHES UNLESS OTHERWISE NOTED.
MINIMUM SIZE IS FOR PHYSICAL FIT ONLY, PUMP VOLUME/OPERATION MAY REQUIRE LARGER BASIN.